ROOFING & BUILDING SUPPLIES

Datasheet

No.1 Architectural Panel Systems

SNAP LOCK

ROOFING & BUILDING SUPPLIES

Datasheet

SNAPLOCK

Snap Lock is a lightweight cladding system ideal for both roof and wall applications in commercial, industrial and residential environments. Its thin distinctive ribs and wide pans give it visual appeal. Snap Lock looks similar to Standing seam without the need of crimping the joints due to the “snapping” process. Available in 25mm and 38mm ribs, Snap Lock can be manufactured in various widths to suit new construction or renovation projects.

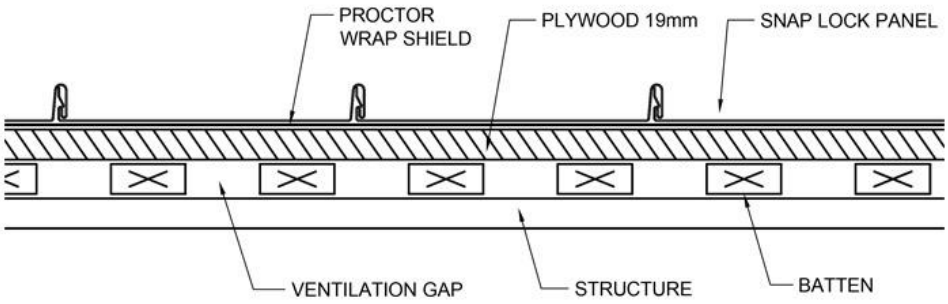

Snap Lock

Characteristics

Panel Rib Height	25mm	25mm	25mm	38mm	38mm	38mm
Girth	400	500	600	400	500	600
Centre to Centre Distance	332	432	532	302	402	502
Tray Dimensions	295mm to 495mm					
Maximum Length	1 - 8 metres (6m recommended)					
Minimum Pitch Requirement	1.5 degrees					

Material Availability

- VM Zinc, Rhine Zinc, Jarden Zinc 0.7mm BMT
- 0.55mm BMT Colorbond / Zincalume / Metallic / Ultra
- 0.7mm BMT Copper
- 0.7mm BMT Aluminium
-

Installation

The support needs to be ventilated, rigid and continuous where all parts of the Snap Lock panels are laid. The plywood minimum thickness shall be 15 mm for cladding and 18 mm for roofing. Snap Lock panels are laid directly over the ply substrate and held in place with a concealed clip. Clips are fixed with countersunk screws onto the timber supports at maximum 600mm centres. Each panel has a male and female rib. The female rib is held in place by a clip. The male rib is placed over both the clip and female rib. Material choice to be verified by client and installation must be in accordance with the BCA.

- **Although all care is taken in the creation of this document n it is only for the purpose of providing information on available profiles. We strongly recommend you discuss your project with us before selecting these products.**